Miele

Operating and Installation Instructions

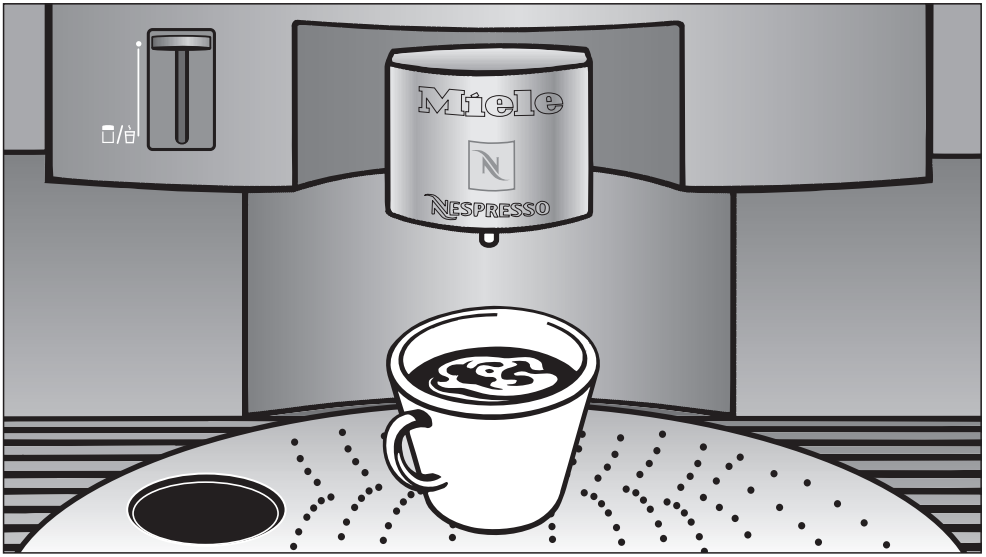

Coffee System CVA 2662

en - US, CA

To prevent accidents
and appliance damage
read these instructions
before
installation or use.

M.-Nr. 07 357 080

Contents

IMPORTANT SAFETY INSTRUCTIONS 4
Guide to the coffee system 8
Display 10
First steps to use 11
Filling water and coffee capsules 13
Allocating various coffee types 15
Making coffee / espresso 17
Coffee and Espresso 18
Preparing hot milk, frothed milk, and Cappuccino 19
After use 22
Setting serving sizes 23
User profiles 25
Selecting a user profile 25
Setting a user profile 25
Making coffee / espresso with user profiles 27
Setting serving sizes for user profiles 27
Settings 28
Selecting a language 28
Time of day 28
Setting the timer 29
Steam system 31
Lighting: Adjusting the brightness 31
Lighting: Setting the switch-off time 32
Display 32
Volume 33
Info (displaying No. of drinks) 33
System lock 34
Water hardness 34
Restore factory default settings 35
Cleaning and care 37
Overview 37
Descaling the coffee system 46
Frequently asked questions 49
Removing a jammed capsule 56
After sales service 59

Contents

Installation instructions 61
Caring for the environment 62
Electrical connection 63
Installation 64
Coffee glossary 66
The Espresso range 67
The "Pure Origin" Espresso range 68
The Lungo range 69

IMPORTANT SAFETY INSTRUCTIONS

When using electrical appliances basic safety precautions should always be followed, including the following:

Read all instructions before installation or use of the coffee system.

Please read these instructions carefully to prevent accidents and machine damage.

This appliance complies with current safety requirements. Improper use of the appliance can cause personal injury and material damage.

Read this safety information carefully before operating the appliance. They contain important information on the safe installation, operation, and care of your coffee system. To avoid the risk of personal injury or damage to the coffee system, it is important that you carefully read the instructions.

Keep them in a safe place and pass them on to any future user.

Proper use

▶ This coffee system is for household use only (up to 20 cups per day), for the preparation of coffee beverages such as espresso, cappuccino, latte macchiato, etc.
Do not use this machine other than for its intended use. Any other use could be hazardous.

▶ Persons which lack physical, sensory or mental abilities or experience with the machine should not use it without supervision or instruction by a responsible person.

Children

▶ Close supervision is necessary when any appliance is used by or near children. They could easily be scalded or burned.

▶ Never let children play with the coffee system.

▶ Install the appliance in an area where it will not be accessible to children.

Technical safety

▶ Before installing the appliance check for externally visible damage. **Do not** operate a damaged appliance.

▶ Before connecting the appliance to the electrical supply make sure that the voltage and frequency listed on the data plate correspond with the household electrical supply. If in doubt, consult a qualified technician.

▶ Be certain your appliance is properly installed and grounded by a qualified technician. To guarantee the electrical safety of this appliance, continuity must exist between the appliance and an effective grounding system. It is imperative that this basic safety requirement be met. If there is any doubt, have the electrical system of the house checked by a qualified electrician.

▶ The appliance must be properly installed before operation to ensure that no electrical components are accessible. Ensure that power is not supplied to the appliance while installation work, repairs or maintenance is performed.

▶ Do not use an extension cord to connect the appliance to electricity. Extension cords do not guarantee the required safety of the appliance (danger of overheating).

▶ This appliance must not be installed or operated outdoors.

▶ If the appliance is installed behind a door front, use the appliance only when the door front is open. Do not close the door front when the appliance is in operation.

▶ Before service or maintenance disconnect the power supply by either removing the fuse, “tripping” the circuit breaker or unplugging the unit.

▶ This appliance must not be used in a non-stationary location (e.g. on a boat).

▶ Installation work and repairs must only be performed by a trained technician in accordance with national and local safety regulations. Repairs and other work by unauthorized persons could be dangerous and may void the warranty.

▶ While the appliance is under warranty repairs should only be performed by an authorized service technician. Otherwise the warranty is void.

▶ Defective components should be replaced by Miele original spare parts only. Only with these parts can the manufacturer guarantee the safety of the appliance.

▶ To protect against fire, electric shock and injury to persons do not submerge the cord or plugs in water or other liquids.

▶ Do not let the cord hang over the edge of a table or counter, or touch hot surfaces.

▶ Do not operate any appliance with a damaged cord or plug, or after the appliance malfunctions or has been damaged in any manner. Contact Miele.

▶ Always attach the cord to the appliance first, then plug it into the wall outlet. To disconnect, turn the machine off, then remove the plug from the wall outlet.

▶ Never open the outer casing of the appliance. Tampering with electrical connections or components and mechanical parts is dangerous and may cause machine damage.

▶ If the machine is installed in combination with other appliances, a protective base should be installed between the appliance and the unit (except for combinations with a plate warmer).

▶ Install or locate this appliance only in accordance with the provided installation instructions.

Use

▶ Use only Nespresso-coffee capsules with this machine. The use of other products will damage the appliance.

Caution! Risk of burns when dispensing hot beverages, they are extremely hot.

Caution! Do not look directly or, with an optical instrument into the lighting - laser radiation.

▶ Do not reach into the brew unit unless the appliance is disconnected from the power supply. Danger of injury.

▶ The water lines must be rinsed and the machine cleaned thoroughly before the first coffee is prepared. The cappuccinatore should also be cleaned.

▶ Only fill the water tank with cold, fresh tap water. Warm or hot water, or any other liquids may damage the machine. The water should be changed daily to prevent bacteria or mold growth.

▶ Do not use deionized or mineral water. Mineral water leads to heavy calcium buildup in the machine that can damage the unit.

▶ Only use cold plain milk in the cappuccinatore. Flavored milk products contain substances that can clog the machine.

IMPORTANT SAFETY INSTRUCTIONS

▶ Do not place anything other than Nespresso capsules un the capsule carousel.

▶ Do not use damaged, broken or dented capsules! They may jam in the machine and damage it.

▶ Never place a cup with an alcohol-coffee mixture underneath the coffee dispenser. Plastic parts of the unit could catch fire!

▶ The hot water and steam dispensed could cause scalding. These functions must be used carefully. Never hold any parts of the body under the steam nozzle or the hot water dispenser. The machine must never be used to clean objects.

▶ Never use a steam cleaner to clean the appliance. Pressurized steam could damage electrical components and cause a short circuit.

▶ Clean the coffee system daily to prevent bacterial growth. All parts of the coffee system are dishwasher-safe except for the capsule plate and the plastic drip tray. Failure to properly maintain machine may cause health issues.

▶ Do not clean inside the capsule plate opening. Danger on injury.

▶ Do not reach into the perforator. Injuries may occur.

▶ Do not touch hot surfaces. Use buttons or steam lever.

▶ To avoid injuries allow the coffee system to cool before cleaning or before putting on or taking off parts. Turn the machine off at the main switch when not in use and before cleaning.

▶ The water in the drip tray can be very hot. Use caution when emptying it. Danger of burns.

▶ The coffee system must be descaled regularly with the supplied descaling tablets. In areas with very hard water the machine needs to be descaled more often.

▶ The capsule plate will soil more or less depending on the coffee capsule used. Clean the capsule plate every 1 to 2 months with a cleaning tablet, available from Miele.

▶ Only use the descaling tablets provided by Miele and be sure to use the correct mixture of water and descaler. Otherwise appliance damage may occur.

▶ Do not hang, lean, sit or place heavy items on the door. The machine may be damaged.

▶ The use of accessories **not** recommended by the appliance manufacturer may result in fire, electric shock or injury to persons.

▶ The appliance is designed for use in room temperatures between 59°F and 140°F (15°C and 60°C). Do not use the appliance outside of this range of temperatures.

SAVE THESE INSTRUCTIONS AND REVIEW THEM PERIODICALLY

Guide to the coffee system

Front view

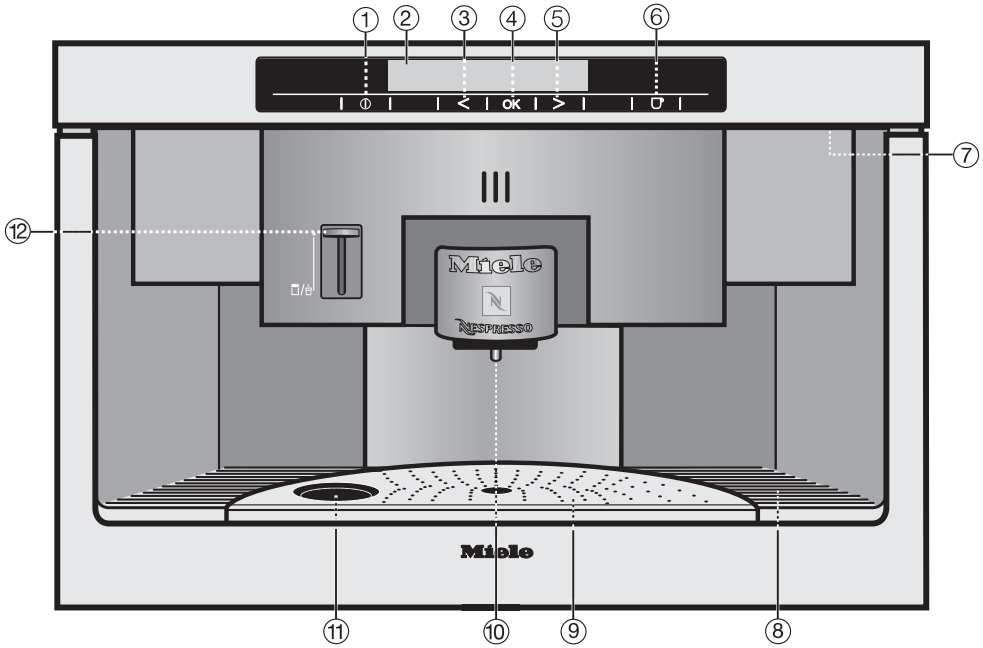

① On/Off ⏻ touch control

② Display

③ Left arrow <, to scroll through program options

④ OK touch control, to confirm selected program options and save settings

⑤ Right arrow >, to scroll through program options

⑥ Drink selection touch control to select the beverage type (coffee or espresso)

⑦ Door grip

⑧ Plastic drip tray

⑨ Metal drip tray

⑩ Coffee dispenser

⑪ Inset for Cappuccinatore

⑫ Valve / Lever for steam and hot water

Interior view

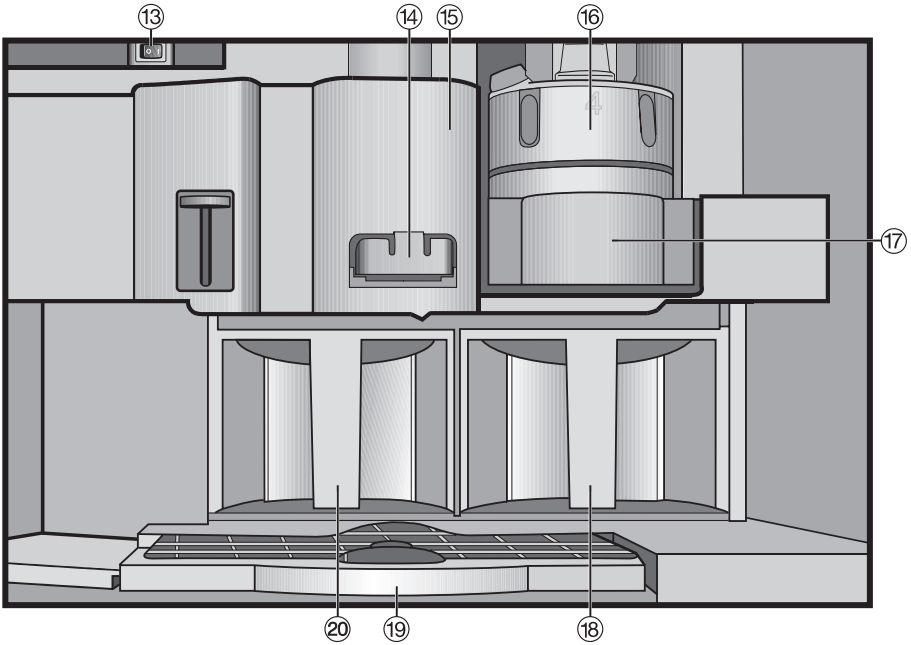

⑬ Main Switch

⑭ Capsule plate (replace with descaling funnel when descaling is performed)

⑮ Brew unit

⑯ Capsule carousel

⑰ Carousel tray

⑱ Water tank

⑲ Drip tray with grid
(with no-spill grid for transport)

⑳ Waste container

Touch controls

Select a touch control with your fingertip to use the machine.

Display

The main menu in the display shows the following symbols:

- Up to 5 different coffee types
- Steam
- Hot water
- User profile for up to 9 different users
- Maintenance program - rinse
- Maintenance program - descale
- Settings - customize appliance

■ Use < or > to select a program item in the display. When the desired program item is highlighted, select OK.

Before the first use

The appliance must be correctly installed and connected before the first use. See the "Installation Instructions".

Clean the appliance and remove protective foils before the first use. See "Cleaning and Care".

Switching on

- Select On/Off ① to turn the coffee system on.

The first few times the machine is turned on with the main switch a welcome screen will briefly appear in the display, followed by other messages. The welcome screen will be displayed until 5 beverages have been prepared.

Miele Welcome

During the very first use, you will be prompted to select a **language**.

- Tap < or > until the desired language appears in the display.
- Confirm by selecting OK.
  The desired language is now set.

Setting the clock

- Tap < or > until the desired **clock format** (12 or 24-hour clock) is highlighted. Confirm with OK.
- Enter the **time of day**: Use the arrow buttons to first set the hour. Confirm with OK.
- Use the same process to set the minutes.
- Select when you would like the time to be displayed:

– **"On"**: The time of day will be displayed even if the appliance is off.

– **"On for 60 seconds"**: When the appliance is turned off, the time of day will remain displayed for 60 seconds.

– **"Not displayed"**: When the appliance is switched off, the time display immediately goes out.

- Select OK to confirm.

Once the settings have been entered correctly, the display will show **Set-up successful**.

- Confirm the message with OK.

Filling lines with water

The appliance is drained completely before leaving the factory. **Before the first drink is prepared**, you will need to pump water into the lines.

- Place a cup under the coffee dispenser.

- Select Hot water using < or >.
- Confirm with OK.
- Allow some hot water to run into a cup.
- Turn off the water by selecting OK again.

The lines are now filled with water, and the appliance is ready to use.

Switching off

- Select On/Off ⏻ to turn the coffee system off.

When a coffee beverage is prepared, the unit rinses once before it switches itself off.

The appliance should be cleaned before filling it with water and coffee capsules (see "Cleaning and care").

Be sure to set the water hardness (see "Settings - Water hardness").

Filling the water tank

The water tank should be washed and filled with fresh cold tap water before each day of use.

⚠ Never put hot water or any other liquid except cold water into the water tank. Do not use deionized or mineral water. They may lead to heavy calcium built-up in the machine that can damage the unit.

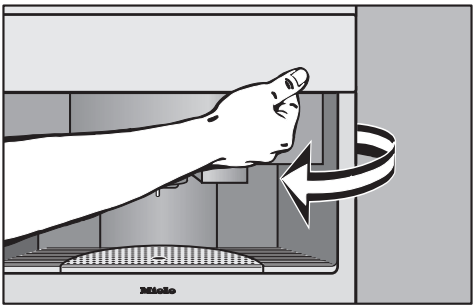

- Open the appliance door.

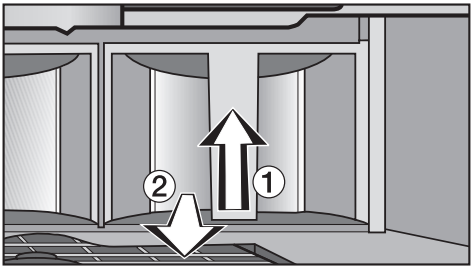

- Lift the water tank ① and pull it out ②.
- Fill the container with fresh, cold tap water to the "Max." mark.

A valve at the tank front prevents leaks.

- Push the water tank back into the machine.

Filling the coffee capsule carousel

Only insert Nespresso coffee capsules in the carousel. Damaged, broken or dented capsules should not be used they may jam in the machine.

There are five chambers, each can hold four capsules. The coffee types have to be allocated to their respective chambers to get the desired coffee type. You can also fill each chamber with the same coffee type.

The chambers are factory set for a coffee type. Fill the chambers respectively or program other coffee types according to your preference. See "Allocating various coffee types".

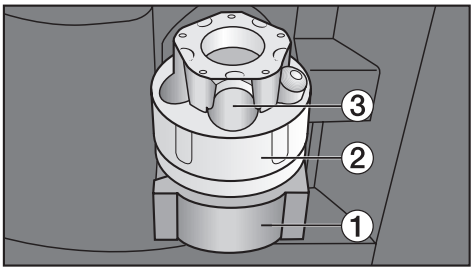

- Pull the carousel tray, ①, all the way out.
- Insert the capsules into the chambers, ③ of the capsule carousel ②, with the flat, foil side facing down. The capsule carousel can also be lifted up and out of the tray for easier loading.

Take care that the capsules sit loosely in the chambers so they do not jam.

- Insert the carousel into the carousel tray.
- Push the carousel all the way into the machine.
- Close the door.

The machine aligns the carousel automatically. A sound will be heard.

Removing the coffee capsules

- Pull out the carousel tray and lift out the carousel.
- Push the carousel ring up and take out the capsules.

Sixteen different Nespresso coffee types are available for this coffee system (as well as occasional "Limited Edition" blends). They differentiate in terms of acidity, fruitness, bitterness and roast. Therefore the preparing times will vary.

See "The Espresso / Lungo range" for more information on the coffee types.

Allocating the coffee types

Five different coffee types can be filled in the five chambers of the capsule carousel. The chambers can be either allocated to the desired coffee types or filled with the same coffee type in all chambers.

- Select "Settings " from the main menu. Confirm with OK.
- Tap an arrow button until "Allocate type" is highlighted. Confirm with OK.
- Use the arrow buttons to select "Chamber 1" (for example). Confirm with OK.

Several options are now available:

Select type

Allows you to select from the coffee types which have already been allocated.

- Use < or > to select the coffee type you wish to allocate to the selected chamber. Confirm with OK.

Rename type

Allows you to enter a new type of coffee.

- Tap < or > until "Rename type" is highlighted. Confirm with OK.

In the display you will see letters and numbers. Use the arrow buttons to select the desired character.

A new word will always be capitalized, and the appliance will then switch to lowercase letters.

- Use < or > to select the desired characters.
- Confirm with OK.

You will see the selected text in the upper line of the display.

If you **misspell** a word, use the arrow buttons to select the trash can symbol. Confirm with OK. The last entered character will be deleted.

Saving an entry

- When the entry is complete, use < or > to select OK. Confirm by pressing OK again.

The menu for the chamber you are "loading" will appear in the display.

- To exit the menu, use < or > to select "back ". Confirm with OK.

Not saving an entry

- If you do not wish to save an entry, use < or > to select "back ". Confirm with OK.

The following options will only appear once a new coffee type has been added:

Change type

This option can be used to change the type of coffee allocated to a chamber.

- Tap < or > until "Change type" is highlighted. Confirm with OK.

Now continue as you would in "Rename type".

Delete type

This option can be used to completely delete a coffee type.

- Select "Delete type" and confirm with OK.
- Use < or > to select the coffee type to be deleted.
- Confirm with OK.

A check appears after the coffee type and it will be erased.

You can allocate **up to 10** types of coffee. If you try to allocate more than 10 coffee types "**Memory full**" will appear in the display. You will need to first erase a coffee type to create space.

Once you allocate a coffee type, it will be available for use in any chamber, even if you entered it under a specific program item, for example under chamber 1.

Chamber symbols in the display

Once you have assigned a type of coffee to a chamber, a coffee bean symbol will appear in front of the chamber number in the main menu. When you select a chamber the type of coffee allocated to that chamber will appear in the top line of the display.

If the **chamber is empty**, an exclamation point will appear after the bean symbol.

If the **chamber has not been allocated with a type of coffee** a question mark will appear after the coffee bean symbol, regardless of whether the chamber if full or empty. When the chamber is selected "Empty" will appear in the top line of the display and coffee cannot be dispensed from that chamber.

Clean the coffee system daily to prevent bacterial growth. All parts of the coffee system are dishwasher-safe except for the capsule plate and the plastic drip tray. Failure to properly maintain machine may cause health issues.

Rinse the water lines before preparing the first drink of the day. If the machine is still cold this will take place automatically. The heating system will heat and the water lines will be rinsed.

- Select On/Off ⏻ to turn the machine on.

The following message appears:

Heating-up phase

When the unit is heated, a message appears:

Rinsing

Water will now run out of the coffee dispenser and a noise will be heard as the carousel aligns.

The main menu then appears in the display:

Pre-warming the cups

Pre-warming the cups allows the coffee to fully develop the flavor and aroma.

Use caution. Steam and hot water are very hot.

- Place a cup under the steam / hot water valve.

To pre-warm with hot water

- Select hot water "☕" using < or >.
- Confirm with OK.
- Allow some hot water run into a cup.
- Turn off the water by selecting OK again.
- Leave the cup for a few seconds to warm, then pour the water away.

To pre-warm with steam

- Select heating with steam "♨" using < or >.
- Press the steam lever down.

The steam supply is temporary. If the steam stops prematurely push the steam lever up then down again.

- Push the lever up to stop the steam from dispensing.
- Pour away any excess water.

Coffee and Espresso

- Place a cup under the coffee dispenser.

- Use < or > to select the desired coffee type.
- Use the "Drink selection" touch control to select Espresso or Coffee. The beverage type you have selected will appear in the upper right hand corner of the display.
- Select OK.

The desired beverage will now be dispensed.

If you prefer to have a portion size that is larger or smaller than the pre-set sizes for coffee and espresso, see "Programming quantities - serving sizes").

Double portion

If you would like a double portion of coffee or espresso, or to prepare two portions at the same time,

- select OK a second time while the display still reads "Double portion?".

The two portions are prepared one after the other.

Interrupting preparation

- Select OK when "Stop" appears in the display.

The drink preparation will stop.

Preparing hot milk, frothed milk, and Cappuccino

This appliance includes a Cappuccinatore, which can be used to easily prepare warm milk, frothed milk, and cappuccino.

Before using the cappuccinatore for the first time, wash it either in the dishwasher or with hot water and liquid dish soap.
See "Cleaning and care".

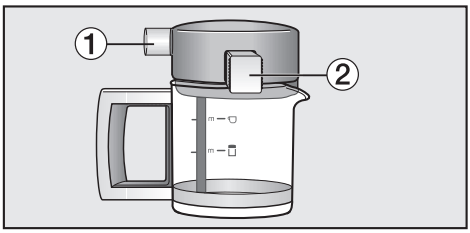

Above the handle on the cappuccinatore there is a valve ①, and a milk spout ② on the side.

Cold milk is best for creating froth.

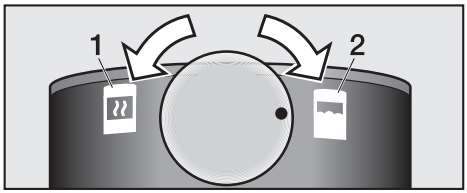

The steam is regulated by turning the valve.
Left: hot milk is prepared
Right: froth is prepared

Be sure not to set the valve between these two settings - this may cause the milk to splatter.

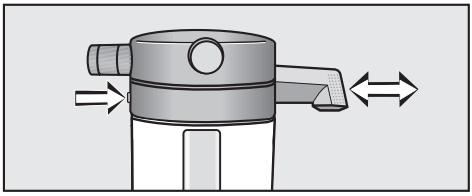

Pushed in: Milk is frothed into the cup

Pulled out: Milk is frothed into the cappuccinatore

When milk is frothed in the cappuccinatore the froth is hotter and has more volume.

When frothing milk into a cup while dispensing a coffee, the steam system must be turned on. See "Settings - Steam system".

The steam supply is temporary. If the steam stops and there is not enough froth prepared, push the steam lever up then down again.

Frothing milk into a cup

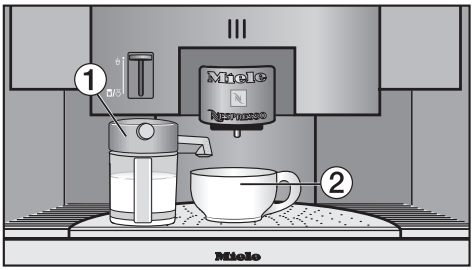

- Pre-warm the cup before filling with froth.
- Push the cappuccinatore spout all the way into the lid.
- Turn the valve all the way to the right.
- Fill the cappuccinatore ① no higher than the **upper** mark with cold milk and cover with the lid on.
- Place the cappuccinatore in the inset on the drip tray, and the cup ② under the spout.
- Slowly press the steam lever down.

  The steam lever must click into the down position - otherwise the valve is not properly connected to the cappuccinatore.
- Push the steam lever up when enough froth is prepared.

Preparing a cappuccino

- Prepare frothed milk in a cup.
- Place the cup of frothed milk under the coffee dispenser.

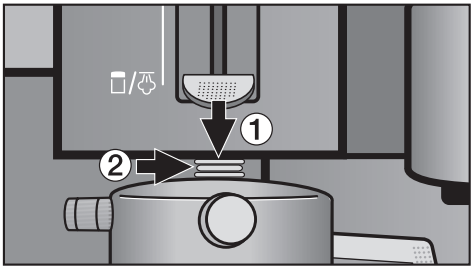

- Use the drink selection "☕" touch control to select Espresso.
- Select OK.

Espresso now flows through the coffee dispenser and the cappuccino is ready.

Frothing milk in the cappuccinatore

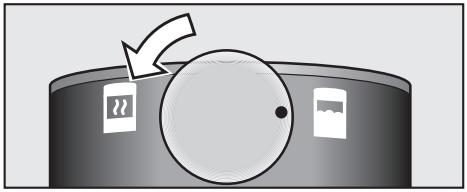

- Pull the cappuccinatore spout into the "out" position.
- Turn the valve all the way to the right for frothing.
- Fill the cappuccinatore to the **lower** marking ① with cold milk and cover with the lid.
- Place the cappuccinatore in the inset on the drip tray.
- Slowly press the steam lever down. The steam lever must click into the down position - otherwise the valve is not properly connected to the cappuccinatore.
- Push the steam lever up when enough froth is prepared.

Heating milk

- Fill the cappuccinatore to the **upper** mark with cold milk and put the lid on.
- Turn the valve all the way to the left for heating.
- Push the milk spout all the way in (hot milk in the cup) or pull the milk spout out (hot milk in the cappuccinatore) and place the cappuccinatore into the recess in the drip tray.
- Slowly press the steam lever down and carefully "connect" the valve to the cappuccinatore.

Rinsing the lid

For a quick cleaning between uses of the cappuccinatore the lid can be rinsed with the steam valve.

> This rinsing **does not** replace the cleaning of the cappuccinatore in a dishwasher.

- Select maintenance "" using < or >.
- Select "Rinse Cappuccinatore" and confirm with OK button.
- Push the cappuccinatore spout "in".
- Place an empty cup under the cappuccinatore spout.
- Press the steam lever down.

The following appears in the display.

Hot water now runs through the lid and flushes it clean. The process will stop automatically when the lid is rinsed.

After use

If you do not wish to rinse the lines automatically, they should be flushed manually before turning the machine off for the day.
When a coffee beverage is prepared, the unit always rinses once before it switches itself off. For this, it is best to place a container underneath the beverage nozzle and the steam vent.

The lines can also be rinsed manually (see "Cleaning and Care" - "Rinsing the System").

The flavor of the coffee depends on the coffee type and the quantity of water used. To ensure the machine uses exactly the amount of water to suit your taste and your cup size, use this feature to program the water amount used.

You can set the serving sizes for espresso, coffee, and hot water.

The **Espresso** is a standard size espresso, for an espresso cup.

The **Coffee** is a standard size coffee. It uses the same quantity of coffee as an espresso, but adds more water.

Regardless of the chamber selected or the type of coffee being prepared all drinks will be dispensed using the programmed serving size.

Setting the serving sizes using the OK button

- Place the cup you will be using to set the portion size under the dispenser for the corresponding beverage type.
- Use the drink selection touch control to select the desired beverage type (coffee or espresso) or select Hot water using < or >.
- Press and hold OK until "Prog. the amount" appears in the display.
- Once the cup is filled to your desire, tap OK again to save the portion size.

The programmed amount will now be dispensed every time the drink set is prepared, no matter which chamber or coffee type is selected for the coffee drinks.

The water flow stops automatically when it reaches the maximum amount possible.
The maximum water amount will then be saved for the drink selected.

If the water tank becomes empty while setting the serving size, the process is canceled and the size is **not** saved.

Setting the serving sizes via Settings "⚙"

- Place the cup you will be using to set the portion size under the dispenser for the corresponding beverage type.
- Select "Settings" from the main menu. Confirm with OK.
- Tap > until "Prog. the amount" is highlighted, confirm with OK.

Espresso, coffee, and hot water appear in the display.

- Use < or > to select the beverage type you would like to set. Confirm with OK.
- For coffee drinks, select the type of coffee desired. Confirm with OK. (If the OK button does not respond, the chamber for the coffee type selected is empty.)
- Select "Start".
- Once the cup is filled to your desire, tap the OK button to save the portion size.

The programmed amount will now be dispensed every time the drink set is prepared, no matter which chamber or coffee type is selected for the coffee drinks.

Up to 9 individual user profiles can be programmed to accommodate different preferences and serving sizes.
See "Setting serving sizes".

- Tap the right arrow > button until user profile "" is highlighted. Confirm with OK.

Several options are now available:

Selecting a user profile

This option allows you to select from user profiles which are already allocated.

- Use < or > to select the desired user profile. Confirm with OK.

To show that a user profile has been selected, the upper display line will now show a number after the "" symbol.

Setting a user profile

To enter a new user profile.

- Tap the < or > until "Set" is highlighted. Confirm with OK.

> You can allocate **up to 9** user profiles. If you try to allocate more than 9 user profiles, the message "**Memory full**" will appear in the display. You will need to first erase a name to create space for another user profile.

In the display you will see letters and numbers.

A new word will always be capitalized, and the appliance will then switch to lowercase letters. You can also use a hyphen and/or empty spaces after the first letter.

- Use < or > to select the desired characters.
- Confirm each character with OK.

You will see the selected text in the upper line of the display.

> If you **misspell** a word, use the arrow buttons to select the trash can symbol. Confirm with OK. The last entered character will be deleted.

Saving an entry

- When the entry is complete, use < or > to select OK. Confirm by selecting OK again.

The menu for the user profile will appear in the display.

Not saving an entry

- If you do not wish to save the entry, use < or > to select "back ". Confirm with OK.

The following options will only appear if you have already added a new user profile:

Changing a user profile

- Select the user profile you wish to change. Confirm with OK.
- Continue as described in "Setting a user profile".

Deleting a user profile

- Select "Delete" and confirm with OK.
- Use < or > to select the user profile you wish to delete.
- Confirm with OK.

A check appears after the selected user profile, and it will be erased shortly.

Revert

The coffee system can be set so that after each drink prepared, it will automatically revert to the standard user profile **or** retains the most recently selected user profile.

- Use the arrow buttons to select the "Revert".

Select from the following options:

Manual

The appliance stores and operates using the selected user profile until another user profile is selected.

- Use < or > to select "manual". Confirm with OK.

After each use

After each drink prepared, the appliance automatically switches back to the standard user profile.

- Use the arrow buttons to select "Default". Confirm with OK.

When switched on

Every time the appliance is turned on, the appliance automatically selects the standard user profile, regardless of which user profile was set before the machine was last turned off.

- Select "When switched on" using the arrow buttons. Confirm with OK.

Making coffee / espresso with user profiles

If you have set the machine for specific user profiles (see "Setting user profiles") you must first select the desired user and then the type of drink.

- Select user profile "" using < or >.
- Confirm with OK.
- Select "Select" using < or >, then select OK.
- Use < or > to select the desired user profile, then select OK.

To indicate that a user has been selected, the upper display line will now show a number after the "" symbol.

The machine can now be operated as usual.

Setting serving sizes for user profiles

You can also set different portion sizes for the remaining 9 user profiles (in addition to the standard user profile).

- Use < or > to select user profile "". Confirm with OK.
- Select "Select" using < or >. Confirm with OK.
- Use < or > to select the user profile you wish to use to set a serving size for. Confirm with OK.

To show that a user profile has been selected, the upper display line will show a number after the user profile "" symbol.

- Proceed as described in the beginning of this section.

All serving sizes will then apply only for the user selected.

Settings

The coffee system can be customized to suit individual preferences.

Selecting a language

- Select "Settings" from the main menu. Confirm with OK.

"Language" is now highlighted in the display.

- Select OK.
- Tap < or > until the desired language is highlighted.

A total of 25 languages are available.

- Confirm with OK.

The setting will be automatically saved and the display will go back to the previous screen.

All displays will now appear in the selected language.

> If a language is accidentally selected, follow the flag to return to the language setting.

Time of day

- Select "Settings" from the main menu. Confirm with OK.
- Tap > until "Time of day" is highlighted, confirm with OK.

Clock format

- Select "Clock format" using the arrow buttons.
- Tap > to select a 12 or 24-hour format.
- Select OK when the desired clock format is highlighted.

The clock format has now been saved.

Setting the time of day

- Select "Set" using < or >.
- Tap < or > to set the hour.
- Confirm with OK.
- Repeat to set the minutes.
- Confirm with OK.

The time is now saved.

You can also set the time of day and change the display options when the coffee machine is turned off.

While the machine is off:

- Select the OK button.
- Select the "Time of day" and confirm with OK.

You can now select "Display" or "Settings" and set or change as desired.

- Confirm with the OK button to save the setting.

Display

You can switch the time of day display on or off:

- Select "Display" using the arrow buttons.

Select one of the following settings:

– **"On"**: The time of day is displayed even if the appliance is off.

– **"On for 60 seconds"**: When the appliance is turned off, the time of day will remain displayed for 60 seconds.

– **"Not displayed"**: When the appliance is turned off, the time display immediately goes out.

A check will appear next to the currently selected option.

- Select OK when the desired display format is selected.

Setting the timer

The machine can be set to turn on or off to suit your preference.

- Select "Settings " from the main menu. Confirm with OK.
- Tap > until "Timer" is highlighted, confirm with OK.
- Select "Set", confirm with OK.

Select one of the following options:

Switching on at a preset time

A specific time can be set to turn the machine on, e.g. for breakfast.

- Use < or > to select "Switch on at", confirm with OK.
- Tap < or > to set the hour.
- Confirm with OK.
- Repeat to set the minutes.
- Confirm with OK.

The setting will be automatically saved and the display will go back to the previous screen. The coffee system will turn on at the preset time.

The timer must be activated (see "Activate") for this function to work.

When the unit is cold, it will always automatically rinse once when it turns on.

With the system lock turned on, the unit does not turn on at the specified time.

If the coffee system turns on automatically three times and no beverage is dispensed, the machine will not turn on automatically after that. The preset times will remain saved and will be activated when the machine is manually turned on again. This is a safety measure to ensure the machine does not turn on daily during a longer absence.

Switching off after

The appliance can be set to turn off automatically. This can be done via the "Switch off after" function, a range from 15 minutes to 9 hours can be set.

If the appliance is not used again after a drink is prepared it will automatically turn off after the programmed amount of time.

- Select "Switch off after" using < or >, confirm with OK.
- Tap < or > to set the hour. Confirm with OK.
- Repeat to set the minutes. Confirm with OK.

For example, if the display shows 1:00, the appliance will turn off 1 hour after the last drink is prepared.

The setting will be automatically saved and the display will go back to the previous screen. The coffee system will turn off at the preset time.

When a beverage has bee prepared, the unit always rinses once before turning off.

Switching off at a preset time

If the coffee system can be set to turn off automatically.

- Select "Switch off at" using < or >. Confirm with OK.
- Tap < or > to set the hour. Confirm with OK.
- Repeat to set the minutes. Confirm with OK.

The appliance will turn off at the programmed time each day.

The timer must be activated (see "Activate") for this function to work.

When a beverage has been prepared, the unit always rinses once before turning off.

Activate

- Use < or > to select "Activate". Confirm with OK.

Both program items "Switch on at" and "Switch off at" are displayed.

- Use < or > to select the desired option.

Tap the OK button to activate or deactivate the option. A check mark in will be shown next to the selected function.

- Select "Accept" using < or >. Confirm with OK.
- Select "Back" using < or >. Confirm with OK.

Steam system

The appliance is equipped with 2 heating systems allowing you to prepare steam and coffee/espresso at the same time. If you do not use steam frequently, it can be turned off to save energy.

> If the steam system is turned **Off**, the appliance will only prepare steam and coffee/espresso one after the other.
>
> If the steam system is **Off** and you operate the steam valve, the appliance will not product steam until it has heated up.
>
> As long as the appliance has not been turned off completely, the steam system will remain active.

- Select "Settings " from the main menu. Confirm with OK.
- Tap > until "Steam system" is highlighted. Confirm with OK.
- Use < or > to select "On" or "Off. Confirm with OK.

Lighting: Adjusting the brightness

The brightness of the machine lighting can be adjusted.

- Select "Settings ", confirm with OK.

- Tap < or > until "Lighting" is highlighted, confirm with OK.
- Select "Brightness", confirm with OK.
- Tap < or > to select a lighter or darker setting.
- Tap OK to save the setting.

If you continue to tap < all the way to the **left** until you can no longer see the small white bars, the **lighting will turn off.**

To turn the lighting off:

- Tap < until the small white bars are no longer visible.

Lighting: Setting the switch-off time

Whenever the machine is On, the machine lighting is also On. The lighting turns off automatically when the machine has been idle for 15 minutes.

When the machine is turned off, you can program the lighting to remain On and to shut off automatically after a certain amount of time if the machine is not used
You can choose a duration from 15 minutes to 6 hours.

- Turn the machine off.
- With the machine turned off, tap OK.
- Select "Lighting", confirm with OK.
- Select "Switch off after", confirm with OK.
- Use < or > to select an switch-off time, confirm with OK.
- Select "Brightness" and tap OK.
- Tap the arrow button to increase or decrease the brightness. Tap OK to save the setting (Factory Setting: Off).
- Select "Back" symbol twice to exit the menu.

The machine will now automatically turn the lighting off after the programmed amount of time.

If you do not want the coffee machine lighting on after the machine is turned off (default setting):

- With the machine turned off, tap OK.
- Select "Lighting", confirm with OK.
- Select "Brightness", confirm with OK.
- To turn the lights off, tap < until the small white bars are no longer visible.
- Select "Back " symbol twice to exit the menu.

Display

The display contrast and brightness can be adjusted.

- Select "Settings " from the main menu. Confirm with OK.
- Tap > until "Display" is highlighted. Confirm with OK.
- Use < or > to select "Contrast" or "Brightness" as desired. Confirm with OK.
- Use < or > to set the contrast lower or higher, or to make the display brighter or darker.
- Confirm with OK to save the setting.

Volume

The appliance can be set so a tone will sound each time a button touched. The volume of the signal tones can also be set.

- Select "Settings " from the main menu. Confirm with OK.
- Tap > until "Volume" is highlighted. Confirm with OK.
- Use < or > to select "Buzzer tones" or "Keypad tone" as desired. Confirm with OK.
- Use < or > to set the volume louder or softer.

If you tap the left arrow button < until no more white bars are shown, the tone will turn off.

- Confirm with OK to save the setting.

Info (displaying No. of drinks)

If the option "Info" is selected, the display will show how many drinks the appliance has prepared to date, or how many more drinks can be prepared before the machine needs to be descaled.

- Select "Settings " from the main menu. Confirm with OK.
- Tap > until "Info" is highlighted. Confirm with OK.
- Use < or > to select from:
  - "Total no. of coffees"
  - "No. of portions until descaling"
  - or the total portions of coffee, espresso, hot water or steam.
- Confirm with OK.
- Select OK to return to the previous menu.

System lock

The coffee system can be locked so that it cannot be used by children or those not familiar with the operating instructions.

> If the appliance is locked, the "Switch on at" function will **not** work.

Activating/Deactivating the system lock

- Select "Settings " from the main menu. Confirm with OK.
- Select "Safety" using < or >. Confirm with OK.
- Tap < or > until "System lock" is highlighted. Confirm with OK.
- Use < or > to select "On". Confirm with OK.

The appliance is now locked and will not operate. The display now shows a closed padlock and a message whenever a button is tapped.

> To deactivate the system lock, follow the same procedure as above, selecting "Off" instead.

Temporarily deactivating the system lock

- Press and hold the OK button for approx. 3 seconds.

The appliance is now temporarily unlocked and drinks can be prepared. **As soon as you turn the coffee system off again the lock will reactivate.**

Water hardness

The hardness of the water used in the coffee system must be determined and programmed into the appliance. The water hardness will determine how frequently the unit must be descaled to maintain the coffee system properly. The machine monitors the volume of water used (including the amount required for producing steam), and will then let you know when a descaling cycle is necessary.
To measure the hardness of your water, use the test strip that is included in your installation kit.

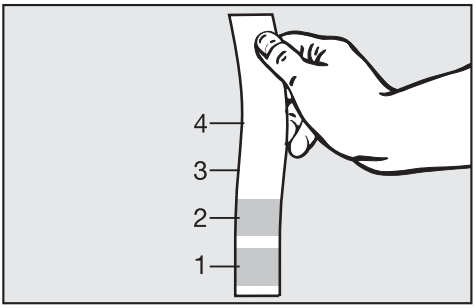

Place the test strip under your kitchen tap for a second and shake off any remaining water. The result is visible in about 1 minute.

> If the water hardness is greater than 40 gr/gal (40°d), the water **must** be descaled more often than displayed. Calcium will build up faster than at a lower water hardness and may damage the machine.

The appliance can be set to one of 4 hardness levels:

- **Level 1 (soft):**
  0 - 3 gr/gal (0 - 3 °d)
- **Level 2 (moderate):**
  4 - 7 gr/gal (4 - 7 °d)
- **Level 3 (hard):**
  7 - 15 gr/gal (7 - 14 °d)
- **Level 4 (very hard):**
  15 - 22 gr/gal (14 - 21 °d)

■ Select "Settings " from the main menu. Confirm with OK.

■ Tap < or > until "Water hardness" is highlighted. Confirm with OK.

■ Use < or >" to set the desired water hardness. Confirm with OK.

The water hardness selected is now saved.

Restore factory default settings

This option allows you to reset all saved settings to the factory default.

You can select whether you wish to reset **All settings** to the factory default (Timer, Steam system, Lighting, System lock, Water hardness, Display, most recent coffee type selected and all standard user profile settings) or to delete the **User profile**.

■ Select "Settings " from the main menu. Confirm with OK.

■ Tap < or > until "Factory default" is highlighted. Confirm with OK.

All settings

If you select "All settings" the factory default settings will all be restored.

■ Under "All settings" select the item "Reset". Confirm with OK.

All settings will be returned to the factory default settings.

If you inadvertently select "Reset", turn off the appliance, the settings will not be reset.

The coffee system is delivered with the following factory default settings:

- Steam system (On)
- Time display (on for 60 seconds),
  Clock format (24 h),
  Timer: Turning on at (12:00),
  Turning off after (1:00),
  Turning off at (12:00),
  Turning on at (deactivated)
  Turning off at (deactivated)
- Lighting: Brightness (medium)
- System lock (Off)
- Water hardness (very hard 4)
- Display: Contrast (medium),
  Brightness (maximum)
- Volume: Signal tones (maximum)
  Button tone (maximum)
- User profile: Revert (when switched on)
- Allocate type:
  Chamber 1 = Volluto
  Chamber 2 = Arpeggio
  Chamber 3 = Cosi
  Chamber 4 = Roma
  Chamber 5 = Decaffeinato

User profile

All user profiles entered by the user are deleted, leaving only the standard profile.

■ Under "User profile " select "Reset". Confirm with OK.

The user profiles will now be deleted.

If you inadvertently select "Reset", turn off the appliance, the settings will not be reset.

Overview

The coffee machine must be cleaned regularly to prevent bacteria.

Recommended frequency	What needs to be done?
Every time milk is prepared if there is more than one hour between uses	Rinse out the lid to the Cappuccinatore
Everyday (at least at the end of the day, before you switch off the appliance)	Rinse the system (intake lines)
	Clean the Cappuccinatore
	Clean the water tank
	Clean the waste container
	Clean the drip tray
	Clean the no spill grid
Once a week (more often if there is heavy soiling)	Clean the cover to the coffee dispenser
	Clean capsule carousel and carousel tray
	Clean the inside door tray
	Clean the interior
	Clean the steam vent
	Clean the front of the appliance (especially right after descaling)
Once a month	Clean the capsule plate (use cleaning tablets)
After approx 15,000 portions	Change the perforator
Depending on water hardness	Descale the appliance

Turn the machine off at the main switch before cleaning.

Allow the coffee system to cool before cleaning. Be aware, the water in the drip tray will be hot.
Danger of burns!

Do not clean in the capsule plate opening. Danger of injury.

Do not clean the unit with a steam cleaner.

Never use abrasive cleaning agents. These will damage the machine.

It is very important to clean the coffee system on a regular basis.

The following components of the coffee system should be cleaned after each day of use to prevent mold and bacteria growth.

Dishwasher safe

- Water tank
- Drip tray with grid
- Metal drip tray
- Cappuccinatore (if used)
- Waste container

Hand wash only with warm water and liquid dish soap

- Plastic drip tray
- Capsule plate

If the parts are frequently cleaned in the dishwasher, they may become discolored through contact with food particles (e.g., tomatoes, etc.). This will not affect their performance.

See the following pages for details of cleaning each part.

Rinsing the System

Before turning off the appliance for an extended period of time, flush the lines, the brewing system, the spout and the steam vent.

When a beverage is prepared, the unit always rinses once before turning off.

It is best to place a container underneath the beverage nozzle and the steam vent while the unit is rinsing.

- Tap < or > until "Maintenance " is highlighted. Confirm with OK.
- Select "Rinse System" and confirm with OK.

  Water will now run out of the coffee dispenser.
- Press the steam lever down.

  Water will now run out of the steam valve.
- Push the steam lever up after a few seconds.

The lines are rinsed. Drinks can either be prepared now or the machine may be turned off.

Water tank

Empty the water tank **daily**, and fill it with cold fresh water shortly before you start preparing a beverage.

When cleaning, check to be sure that there is no debris in or around the valve. This would prevent the tank from connecting properly, causing it to leak.

- Wash the water tank in the dishwasher or by hand with hot water and liquid dish soap. Dry with a soft cloth.
- Clean the niche of the water tank.

Waste container

Clean the waste container **daily**. Typically there will also be some water in the container, left over from the brewing and rinsing processes.

- Slightly lift the waste container, then pull it out of the appliance.
- Wash the waste container in the dishwasher or by hand with hot water and liquid dish soap.
  Dry with a soft cloth.

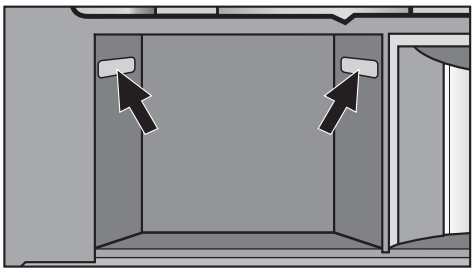

- Clean the waste container niche. Be sure to clean the sensors, left and right, the sensors read if the waste container is inserted and if it needs to be emptied.

Drip tray with grid

Do not remove the drip tray from the appliance for a few minutes after the final rinse, as water will still run from the lines.
Use caution when removing the drip tray, the water may be hot. Danger of burns.
Clean the drip tray **daily**.

- Open the appliance door and carefully remove the drip tray from the appliance.
- Wash the drip tray and the grid in the dishwasher, or by hand with a mild solution of warm water and liquid dish soap, then dry thoroughly.
- Clean and dry the metal sensors at the back of the drip tray. If the sensors are soiled or wet the unit cannot read when the drip tray is full and needs to be emptied.

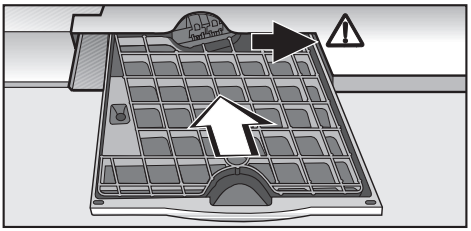

- Push the drip tray, with the grid inserted, along the right hand side of the opening and to the back of the machine.
- Close the door.

Plastic and metal drip trays

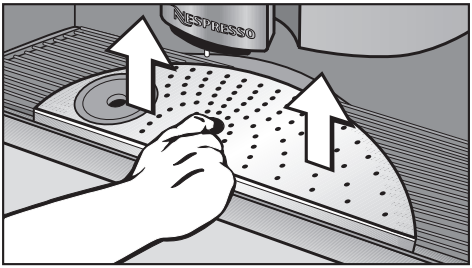

- Take the plastic and metal drip trays out of the appliance and wash them.

Wash the plastic drip tray by hand only.

Capsule carousel and tray

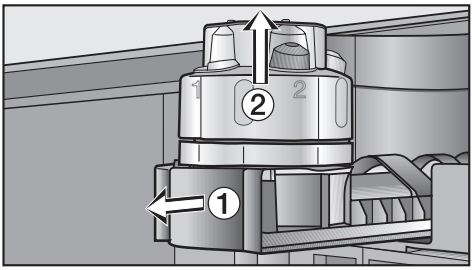

- Pull the carousel tray ① out as far as possible.
- Lift the capsule carousel ② up and out.

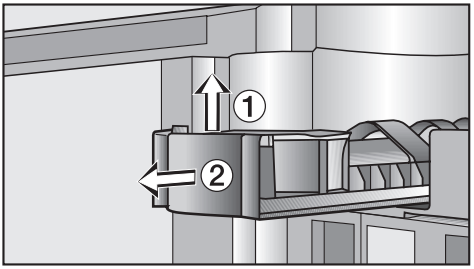

- Lift up the tray slightly ①, and pull it all the way out ②.
- Wash the capsule carousel and tray in the dishwasher, or by hand with a mild solution of warm water and liquid dish soap, then dry thoroughly.

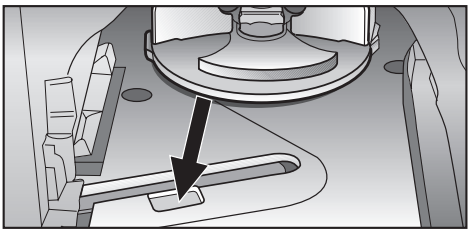

- Clean the carousel niche as well. Be sure to clean the sensor, which selects the proper capsule compartment, and the recess in the floor of the niche. Dry with a soft cloth.
- To reinsert the tray, slide the runners along the guide rails and push them into the machine until they click into place.
- Insert the capsule carousel, the appliance will align it automatically.
- Slide the tray and capsule carousel back into the appliance.

Coffee dispenser cover

- Open the appliance door.

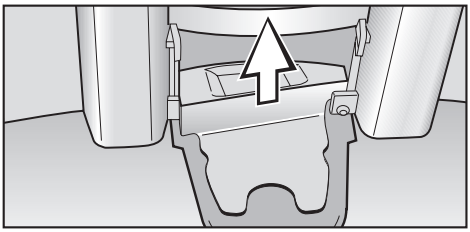

- Slide the cover, in the middle of the appliance door, upward.
- Clean the cover in the dishwasher, or with a mild solution of warm water and liquid dish soap. Also clean the inside of the door with warm water and a mild solution of liquid dish soap. Dry thoroughly.
- Slide the cover back onto the coffee dispenser. Be sure that the cover sits properly on the dispenser.

Interior and appliance door

Turn the machine off at the main switch before cleaning.

- Once all removable parts have been taken out, clean the interior with a mild solution of warm water and liquid dish soap.

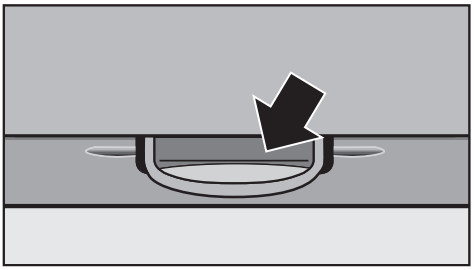

- Also clean the small drip catch in the lower part of the inside door.

Capsule plate

The capsule plate will soil more or less depending on the oil content of the coffee capsule used.

Clean the capsule plate as necessary or when the machine needs to be descaled with the supplied cleaning tablets. The cleaning tablets can be purchased from Miele.

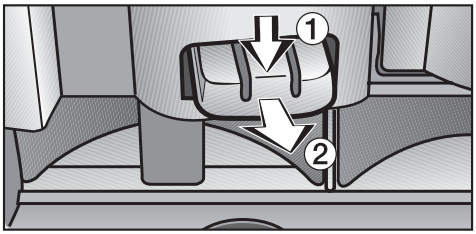

- Press the checkered portion, ①, down and pull the capsule plate, ②, out.
- Dissolve one cleaning tablet in hot water.
- Place the capsule plate in the solution and let it soak for one hour.
- Rinse thoroughly and dry the capsule plate.
- Insert the capsule plate back into the machine until it clicks into place.

Steam valve

The small rubber sleeve which connects the steam valve to the cappuccinatore can be removed for cleaning. The sleeve as well as the steam valve tip (underneath the rubber sleeve) should be cleaned regularly.

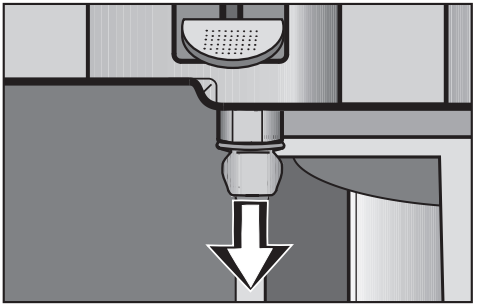

- Press the steam lever down and pull off the rubber sleeve.
- Clean the rubber sleeve and the steam valve tip with a mild solution of warm water and liquid dish soap.
- Reattach the rubber sleeve firmly on the steam valve tip. Be sure it is seated correctly.
- Push the steam lever up

If the steam valve is down when the door is closed, it could cause damage.

Exterior

If soiling is not removed promptly it could cause the surface of the machine to alter or discolor. Be sure to remove soiling immediately.

- Turn off the machine using the On/Off button.
- The front of the appliance can be cleaned with a sponge and a solution of warm water and non abrasive liquid dish soap. Dry with a soft cloth.

Only use a slightly damp sponge when cleaning the controls. Water could penetrate into the electronics and cause damage.

The external surfaces of the coffee machine are susceptible to scratching. Scratches on the glass surface could also weaken the glass making it more susceptible to breakages.

Glass cleaners may be used to clean the exterior. However **do not** allow them to sit or "puddle", this can cause damage to the surface. **Remove the cleaner promptly.**

To better maintain your appliance avoid the following:

- cleaners containing soda, ammonia, thinners, or chlorides
- cleaners containing descaling agents or lime removers,
- abrasive cleaners,
- stainless steel cleaners,
- caustic (oven) cleaners,
- scouring pads, steel wool, hard brushes,
- eraser sponges,
- metal scrapers.

Wipe any spills from descaling immediately!

Cappuccinatore

Clean the cappuccinatore after every use, otherwise it may become blocked with dried milk and hard to clean.

The cappuccinatore can be disassembled into parts for thorough cleaning. For best results, use a dishwasher - all parts are dishwasher-safe.

- Separate the lid, remove all parts and clean.
  To remove the valve, the dot needs to be in the 12 o'clock position (between the hot milk and froth symbols).

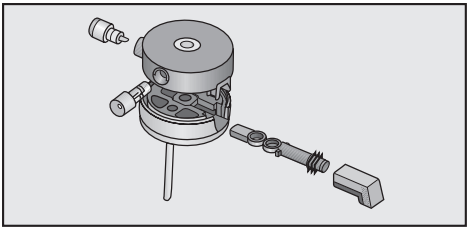

- Re-assemble the lid as shown in the illustration.
  When replacing the valve be sure the dot is facing the upper right.

Be sure that the parts are assembled properly e.g., no gap between each half of the lid.

Be sure that the re-assembled lid is seated correctly on the pitcher. The valve belongs over the handle of the cappuccinatore. If the valve is in the wrong position, the cappuccinatore will not work properly.

Maintenance

The perforator should be changed after 15,000 cups of coffee / espresso. The perforator can be purchased from Miele.

> It is recommended to contact the Miele Service department for assistance in performing this maintenance task.

Settings

01 02 03 04 05

- Select "Settings " from the main menu. Confirm with OK.
- Tap < or > until "Maintenance" is highlighted. Confirm with OK.
- Select "Carry out". Confirm with OK.

The appliance is now lowers the perforator. The display then reads:

i Remove capsule plate and change the capsule hopper

- Open the appliance door.
- Pull the capsule plate out.

> Do not reach up into the perforator opening. Danger of injury!

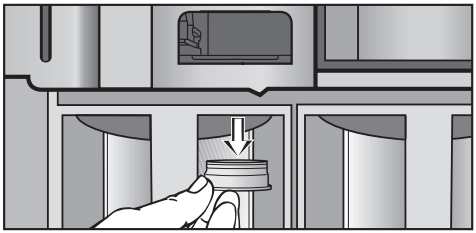

- Pull the rubber connector down and out.

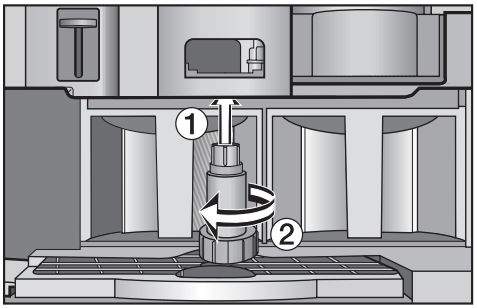

- Insert the tool (supplied) up into the unit, ①. Turn it to the left, ②, to loosen and remove the perforator

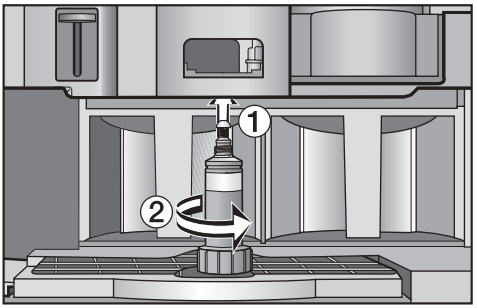

- Screw the new perforator firmly into the unit. The spring and ball must be inserted in the perforator opening so that the ball is on top.
- Insert the rubber connector from the bottom up (with the funnel pointing downwards).
- Insert the capsule plate and close the door.

Descaling the coffee system

The coffee system must be descaled regularly. The time period depends on the water hardness set. The appliance will display a reminder message and will eventually lock if not descaled.

Once the system is at the point where only 50 drinks can be prepared before descaling must be performed, the display will show the message: **No. of portions until descaling: 50**.
This message will appear and countdown after each drink until descaling needs to be completed.

- Select OK to acknowledge the message.

Once the counter reaches 0 the appliance can only be used again once descaling is performed, the display reads "Descale - Start".

Descale	Start

- Select OK.

To descale the machine, you will need descaling tablets and the colored descaling funnel.

Only use the enclosed descaling tablets for descaling. The descaling tablets are specially designed for this coffee system. Descaling tablets can be purchased from Miele.
Other agents may damage the machine and affect the taste of the coffee and hot water.

Be sure that the correct mixture of descaling agent and water are used to prevent damage to the machine.

To prevent damage to the exterior **wipe up any descaling solution spills immediately!**
Thoroughly clean the water tank and the drip tray of descaling residue.

The descaling cannot be interrupted once the OK button has been pressed. The process must be allowed to run through to completion.

This is a safety feature to ensure the process will be completed. Descaling is important to increase the life of the machine and to ensure the best results possible.

The display will guide you through the descaling process. Follow the prompts (for example, empty drip tray, fill water tank, etc.).

Do not skip any steps or remove a part unless prompted by the display. This will cause the program to fault and descaling will restart.

- Remove the water tank and fill it to the mark ⇄ with **lukewarm** water. (Do not **under fill** the water tank, this will cause the descaling process to end prematurely.)
- Add **2 descaling tablets** to the water. Allow the descaling tablets dissolve completely, before closing the lid and placing the water tank back into the appliance.

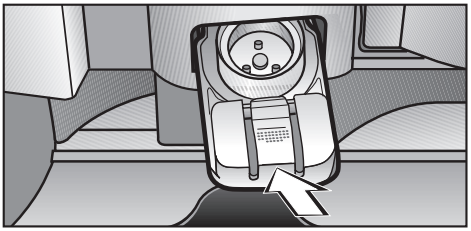

- **When the message appears in the display**, remove the capsule plate and replace it with the colored descaling funnel.
- Place the waste container under the steam valve and coffee dispenser to collect the waste water.

There will be at least 5 minutes before the descaling process starts. This time is needed for the descaling tablets to completely dissolve in the water. If the process takes longer than 5 minutes to start, the appliance is too warm.

During the descaling process, a small amount of water and descaling agent will exit the steam valve and coffee dispenser. This is followed by an activation period, before more descaling agent is drained. A message in the display will appear to let you know approximately how long the descaling process will take.

- When the display prompts you to add fresh water to tank, rinse the tank throughly with fresh water, and fill to the ⇶ mark with fresh water.
  Also empty the **Waste container** at this time.

During rinsing, water will flow from both nozzles. The **drip tray** will need to be emptied several times during this process.

- When the display shows **Prog. finished**, tap OK.

The appliance is now fully descaled and ready for use.

Descaling before prompted

- Use < or > to select Descale "⇶" .
- Select OK to begin the descaling process.

⚠ Repairs to electrical appliances should only be carried out by a suitably qualified person in accordance with local and national safety regulations. Repairs and other work by unqualified persons could be dangerous.

Machine problems

The light does not illuminate when the appliance is turned on.	
Possible fault	**Solution**
The lighting is turned off.	Turn on the lighting, see "Settings - Lighting". If not, the light bulb has burnt out. Contact Miele's Technical Service Department.
The display remains dark.	
Possible fault	**Solution**
– The main switch is turned to "0". – The plug is not inserted into the socket correctly. – The fuse has blown or is defective.	– Turn the main switch to "I". – Plug the machine in. – If the fuse has blown contact Miele's Technical Service Department.
The unit suddenly turns off.	
Possible fault	**Solution**
– Is the machine programmed to switch off after a programmed time? – Is the machine plugged in?	– The machine goes into standby mode when not used for a programmed time. See "Settings Switch off after". – Plug in the machine.
The lighting suddenly turns off.	
The lighting turns off automatically if the machine has not been used for 15 minutes.	

The coffee system does not turn on, even though the "Turn on at" setting has been activated.	
Possible fault	**Solution**
– The system lock has been activated. – The machine was not used 3 times in a row after the automatic turn on.	– Deactivate the system lock, see "Settings - System lock". – Turn on the appliance manually and use as normal.
The display is hard to read.	
Adjust the contrast and/or brightness of the display, see "Settings - Display".	
The door will not open or close.	
Possible fault	**Solution**
The steam valve is not in the correct position.	Push the steam valve down, then pull it upwards as far as it will go.
The time of day needs to be reset.	
Possible fault	**Solution**
The machine was unplugged or a power failure occurred.	Reset the time of day, see "Settings - Time of day". The preset times for turning on or off automatically are saved and do not need to be reset.

Preparing / Dispensing problems

No beverage is prepared although there are coffee capsules in the carousel and there is enough water in the water tank.	
Possible fault	**Solution**
– The water tank is not sitting properly in the appliance. – A coffee capsule is jammed in the carousel.	– Reseat the water tank. – Open the appliance door. – Pull the carousel tray out, lift out the capsule carousel and make sure all capsules can move easily. – Reinsert the carousel in the tray and push it all the way in. – Close the door.
No hot water or steam is dispensed from the steam valve.	
Possible fault	**Solution**
– The water tank is not sitting properly in the appliance. – The steam valve is blocked.	– Reseat the water tank. – Open the appliance door. – Press the steam lever down and pull off the rubber sleeve. – Using the small end of the provided tool unscrew the top of the steam valve counterclockwise. – Clean the tip and screw it on again.
Steam and coffee / espresso cannot be prepared simultaneously.	
Possible fault	**Solution**
The steam heating system is turned off.	If the steam system is turned off steam and coffee cannot be dispensed at the same time. To turn the steam system on, see "Settings - Steam system".

Although the steam heating system is turned off, it is still possible to simultaneously prepare espresso / coffee and steam.	
Possible fault	**Solution**
Steam can be dispensed as long as the steam heating system is warm.	Once cooled the system will no longer dispense steam.
The steam smells like rubber.	
The rubber odor will wear off with time and usage.	
The cappuccinatore does not dispense milk froth.	
Possible fault	**Solution**
– The spout turned to the side so that froth can only be prepared in the cappuccinatore.	– Turn the spout to the cup.
– The valve and the froth dispenser of the cappuccinatore are not properly inserted in the lid.	– See "Cleaning and care".
– Are any single parts of the cappuccinatore clogged?	– Clean the cappuccinatore.
The coffee dispensing is interrupted.	
Possible fault	**Solution**
If a double espresso / coffee was selected the machine uses two coffee capsules.	Dispensing is interrupted when the carousel chambers are empty. Refill coffee capsules.
The appliance does not rinse when turned on.	
If the appliance is at a temperature of 140°F (60°C) or above, the rinse feature will not work.	
The drip tray is empty but there is still a repeated prompt to empty it.	
Possible fault	**Solution**
– The contacts are wet and or dirty. – Is the drip tray inserted properly?	– Check the drip tray contacts. – Reinsert the drip tray. – Using the main switch turn the appliance off the on again. If the message persists contact Miele Technical Service Dept.

Coffee results

The dispensed coffee has ground coffee in it.	
Possible fault	**Solution**
The capsule plate is soiled.	Clean the capsule plate, see "Cleaning and Care".
The water flow stopped while the quantity was being programmed.	
Possible fault	**Solution**
– If the maximum water amount is reached, the water dispensing stops automatically. The maximum water amount is saved. – There was not enough water in the tank. The dispensed water amount will not be saved.	– Refill the water tank and reset the serving size.
The preparing time and amount of coffee is very different.	
Depending on coffee type the grind level will differ between coarse and fine. Preparing time and amount will vary.	
The espresso / coffee is not hot enough.	
Possible fault	**Solution**
– Check if the capsule plate is clogged.	– Clean the capsule plate. – Pre-warm the cup.
The coffee is too weak.	
Possible fault	**Solution**
– Check the water amount saved in the memory per coffee. – After 15,000 cups of coffee the perforator needs to be replaced.	– Adjust if necessary. – See "Cleaning and care - Maintenance".

There is water in the waste container.	
This is not a fault. This is residual water from the brewing and rinsing processes.	
There is "coffee water" in the waste container.	
Possible fault	**Solution**
The capsule plate is not inserted correctly.	Reinsert the capsule plate.
The descaling process was started accidently.	
The descaling process cannot be stopped once the OK button has been pressed. The process now needs to be completed as a safety measure. Descaling is important to increase the life of the machine and to ensure the best possible results. See, "Descaling".	
The heat-up time has gotten longer, the water flow amount is incorrect and the machine is not performing properly.	
The machine needs to be descaled. See, "Descaling before prompted".	

"Fault" messages

The message "Push water container right in" appears in the display.	
Possible fault	**Solution**
– No water can be pumped from the water tank. – This message also shows if the water tank was not filled correctly during descaling.	– Fill the system with water. See "Before using the coffee system for the first time". – Remove and reinsert the water tank. – Refill to the mark and restart descaling. – If the message still shows, contact Technical Service.
One of the messages F 72, F 75 or F 76 appears in the display.	
See "Removing a jammed capsule".	
One of the messages F 73, F 74 or F 77 appears in the display.	
– Follow the instructions in the display if necessary. – Turn off the appliance, wait a few seconds, then turn it back on. If the problem persists, contact Miele's Technical Service Department.	

Removing a jammed capsule

⚠Turn the machine off at the main switch in the upper left corner. Danger of electric shock. The machine must be turned off before performing the next steps.

What if F 72 appears in the display?

A capsule has jammed between the capsule plate and the capsule carousel.

- Open the appliance door.

Turn off the appliance with the main switch.

- Attempt to pull out the carousel tray.

If the carousel tray could be pulled out, remove and dispose of the damaged capsule.

- Clean the carousel tray niche. Thoroughly clean the sensor and the recess in the floor. Dry with a soft cloth.
- Return all parts to the machine, then use the main switch to turn the appliance back on again.
- Close the door.

If the carousel cannot be pulled out :

- Attempt to remove the capsule plate.
- Look into the brew unit, attempt to remove and dispose of the damaged capsule.
- Push in the capsule plate.
- Return all parts to the machine, then use the main switch to turn the appliance back on again.
- Close the door and follow the instructions in the display.

If the fault still appears in the display or the damaged capsule could not be removed easily, contact Technical Service.

What if F 75 appears in the display?

The waste container sensors are dirty.

- Remove the waste container and clean the niche, paying special attention to the sensors on the left and right hand sides.
- Place the waste container back in the niche.

The coffee capsule was not pushed onto the capsule plate.

- Remove the carousel tray and capsule plate from the machine.
- Clean the capsule carousel niche. Thoroughly clean the sensor and the recess in the floor. Dry with a soft cloth.
- Return all parts to the machine, then use the main switch to turn the appliance back on again.
- Close the door.

The coffee capsule rests on the capsule plate.

- Open the appliance door.

Turn off the appliance with the main switch.

- Remove the carousel tray and the capsule plate from the machine.

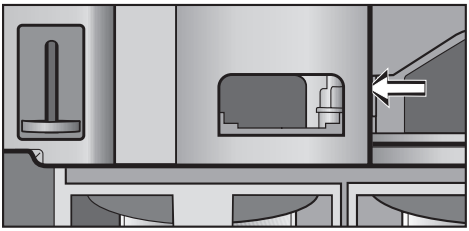

- On the right side of the capsule plate is an opening. Check if a coffee capsule has jammed there.
- Use a wooden spoon handle (only) to push the capsule into the waster container.
- Return the capsule plate, carousel tray and capsule carousel to the machine.
- Turn the appliance on with the main switch.
- Close the appliance door and follow the instructions in the display.

If the fault still appears in the display or the damaged capsule could not be removed easily, contact Technical Service.

Removing a jammed capsule

What if F 76 appears in the display?

The coffee capsule was not pushed correctly onto the capsule plate and is possibly damaged.

- Open the appliance door.

Turn off the appliance with the main switch.

- Remove the carousel tray and the capsule plate from the machine.

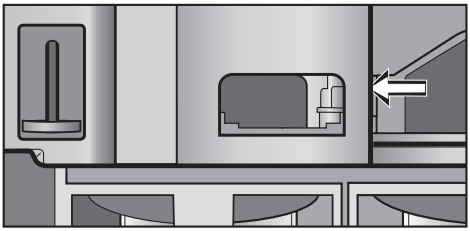

- On the right side of the capsule plate is an opening. Check if a coffee capsule has jammed there or further up in the brew unit.
- Use a wooden spoon handle (only) to push the capsule into the waster container.
- Turn the appliance back on with the main switch.
- Close the door and follow the instructions in the display.

No coffee capsule is seen on the capsule plate, because it is stuck in the brew unit.

- Open the appliance door.

Turn off the appliance with the main switch.

- Remove the carousel tray, capsule plate and capsule plate from the machine.

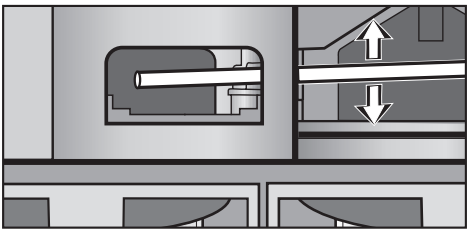

- Check to see if a capsule is lodged in the top of the brew unit.
- Use a wooden spoon handle (only) to dislodge the coffee capsule.
- Return the capsule plate, carousel tray and capsule carousel to the machine.
- Turn the appliance on with the main switch.
- Close the appliance door and follow the instructions in the display.

If the fault still appears in the display or the damaged capsule could not be removed easily, contact Technical Service.

In the event of a fault which you cannot easily fix yourself, please contact the Miele Technical Service Department at the contact information on the back of this booklet.

When contacting the Technical Service Department, please quote the model and serial number of your appliance given on the data plate inside the appliance.

MieleCare

(USA only)

MieleCare, our Extended Service Contract program, gives you the assurance of knowing that your appliance investment is covered by 5 years of worry free ownership. **MieleCare** is the only Extended Service Contract in the industry that guarantees repairs by a Miele Authorized Service Provider using genuine Miele parts. Only genuine Miele parts installed by factory trained professionals can guarantee the safety, reliability, and longevity of your Miele appliance.

Please note that unless expressly approved in writing by Miele's Service department, Extended Service Contracts offered by other providers for Miele products will not be recognized by Miele. Our goal is to prevent unauthorized (and untrained) service personnel from working on your Miele products, possibly doing further damage to them, you and/or your home.

To learn more about **MieleCare** Extended Service Contracts, please contact your appliance dealer or visit us online at:

http://mieleusa.com/mielecare

Miele

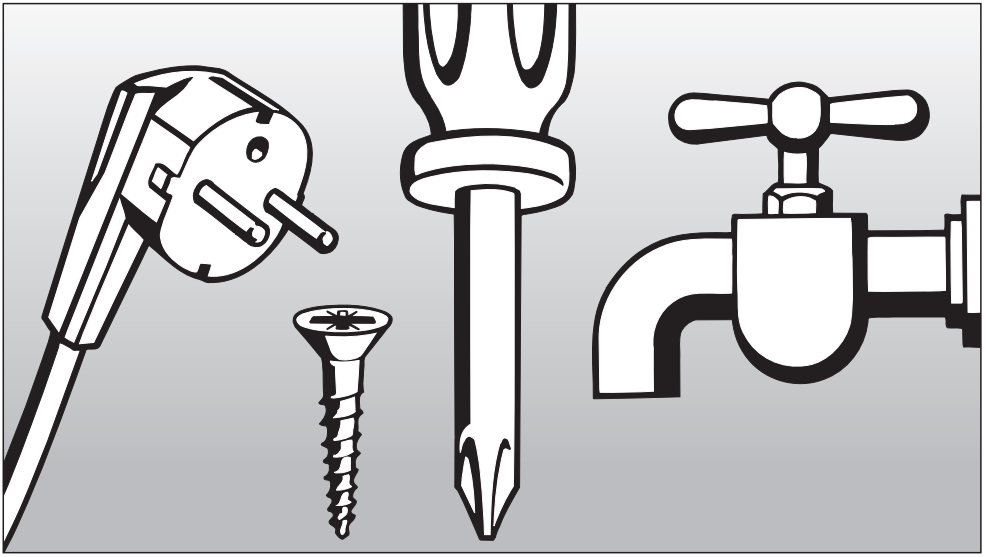

Installation instructions

Information is subject to change. Please refer to our website to obtain the most current product specification, technical & warranty information.

Disposal of packing material

The cardboard box and packing materials protect the appliance during shipping. They have been designed to be biodegradable and recyclable. Please recycle.

Ensure that any plastic wrappings, bags, etc. are disposed of safely and kept out of the reach of children. Danger of suffocation!

Disposal of an old appliance

Old appliances may contain materials that can be recycled. Please contact your local recycling authority about the possibility of recycling these materials.

Ensure that the appliance presents no danger to children while being stored for disposal. Before discarding an old appliance, unplug it from the outlet, cut off its power cord and remove any doors to prevent hazards.

Make sure that the power to the machine is OFF before installing or performing maintenance or repairs.

All electrical work should be performed by a qualified electrician in strict accordance with national and local safety regulations. Installation, repairs and other work by unqualified persons could be dangerous.

Verify that the voltage, load and circuit rating information found on the data plate match the household electrical supply before installing the coffee system.

Do not connect the appliance to a power inverter or directly to power produced outside of the normal electrical grid (i.e. direct solar or wind power source).

Direct connection to such power sources can cause power surges and tripped breakers when the appliance is turned on, and could damage the appliance.

Do not connect the appliance to energy saving plugs or outlets. The reduction of power to the appliance caused by these devices will cause the appliance to run hot and may damage it and/or shorten its usable life.

If there is any question concerning the electrical connection of this appliance to your power supply, please consult a licensed electrician or contact Miele's Technical Service Department. See back page for contact information.

WARNING:
THIS APPLIANCE MUST BE GROUNDED

Important

The coffee system comes equipped with a 6 ft (1.8 m) power cord with a NEMA 5-15P molded plug for connection to a 120 V, 15 A, 60 Hz power supply.

Installation options

The coffee system is designed to be built into cabinetry.

Miele appliances can be installed flush or proud. Discuss your installation requirements with your architect, designer and installer.

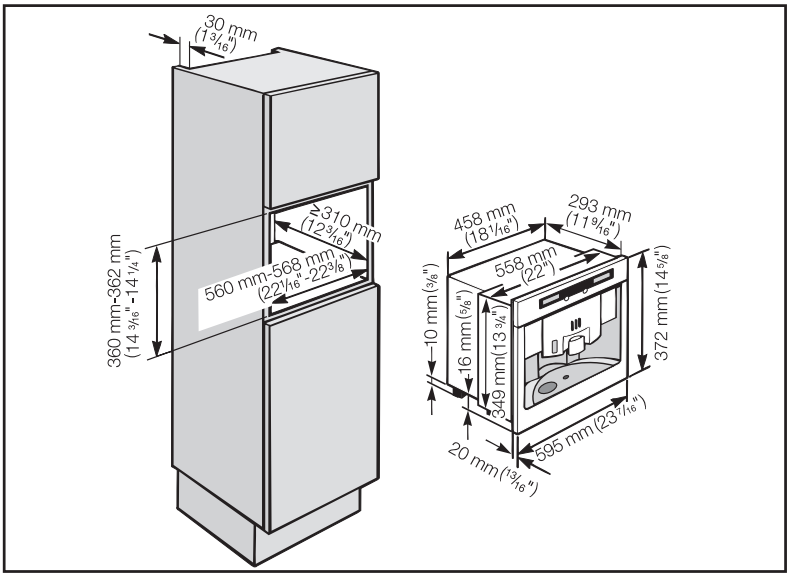

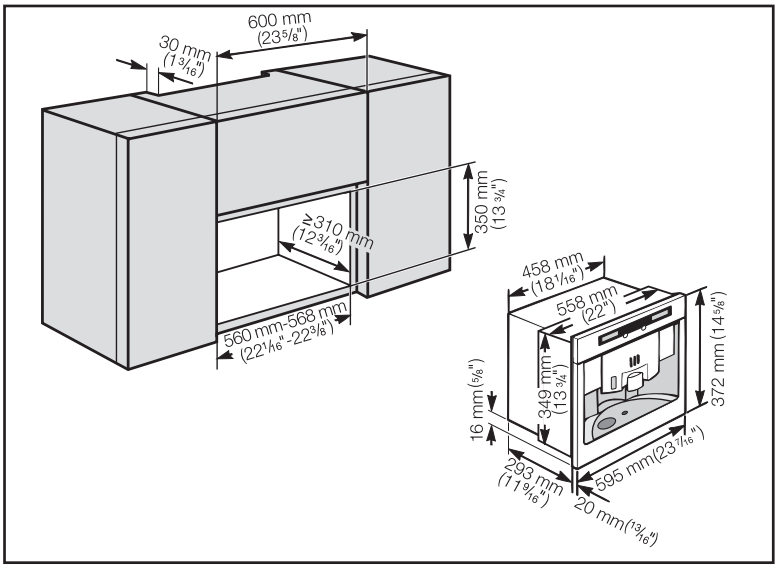

A combination with other Miele built in appliances is possible. If the machine is installed in combination with other appliances, it should be installed with a protective base between the appliance and the unit (exception: installation with a built-in plate warmer).

A special display cabinet is also available from your dealer or Miele, as an installation option.

Installation

Make sure power is not supplied to the appliance while installation or maintenance work is performed. Disconnect the power supply to the work area by unplugging the unit, tripping the circuit breaker or removing the fuse. The coffee system must be properly installed before being used.
This unit should only be used in room temperatures ranging between 59 °F and 140 °F.

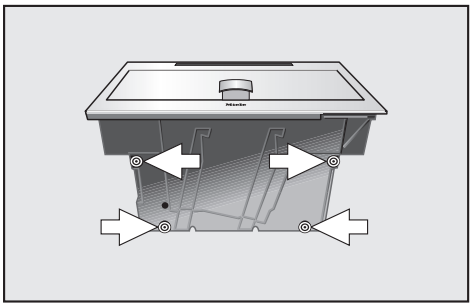

- Push the appliance all the way back into the cabinet and center it. If necessary level the unit with the four height adjustable feet.

The feet can be turned out up to 3/8" (10 mm).

- If your cabinet has 3/4" (19 mm) side walls, drill four holes for the mounting.
- Center the unit and turn the screws a little bit in and then out again.
- Take the unit out of the niche and drill four holes at the screw markings (1/16" [2 mm], diameter 3/16" [4.5 mm]).
- Plug the appliance into the electrical outlet.

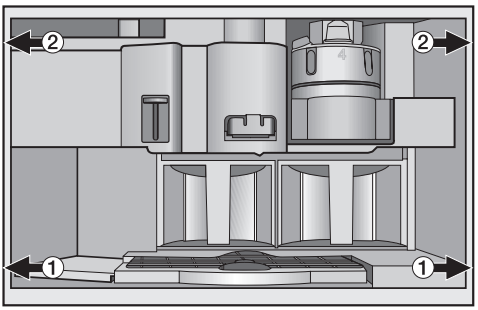

- Push the appliance into the niche.
- Open the door and partially tighten the screws.
- Carefully turn the lower screws, ①, to center the machine.
- To secure the appliance in the cabinet, tighten the upper screws, ②, by hand. Do not use an electric screwdriver.

Coffee glossary

Caffè is the Italian term for a standard espresso.

Caffè americano is a thin espresso with water added.

Caffè corretto is espresso with a splash of liquor.

Caffè freddo is iced coffee. An extended version of espresso served with ice.

Caffè latte is a double espresso in a large cup filled with hot milk, topped with little or no foam.

Caffè moca consists of equal parts of espresso, hot milk and cocoa.

Caffè ristretto is the strongest most concentrated espresso. The water is reduced to 2 tablespoons (30 ml) per serving.

Caffeine - the caffeine content of espresso is only a third or half of that found in coffee. The stronger the roast, the less caffeine the espresso will contain.

Cappuccino is espresso with frothed milk. It is equal parts of espresso, hot milk and foam.

Cappuccino chiaro is a "light" cappuccino with less espresso and more hot milk.

Cappuccino scuro is a "dark" cappuccino with more espresso and less hot milk.

Cappuccino senza schiuma is a cappuccino without the froth.

Crema is the sign of the perfect cup of espresso - a fine, nut or cinnamon brown foam on the surface of the espresso, which is only created when the pressure is sufficiently high. The crema contains foamed oils which are rich in flavor and aroma.

Espresso, see Caffè.

Espresso corto is a "short", strong espresso.

Espresso doppio is a double portion of normal espresso.

Espresso lungo is the longer, less concentrated version served in a standard coffee cup.

Espresso ristretto is a double strength, bitter tasting espresso.

Macchiato is espresso with a dollop of hot, foamed milk giving a dappled (macchiato) appearance.

Pre-warming the cup is recommended to prevent the espresso from cooling too quickly.

Ristretto (black)
is the typical Italian espresso. It is a short, strong, full-bodied espresso with a touch of acidity. It has a pleasantly lingering taste.

Strength: 10
Ideal cup size: Espresso, ½ Espresso or Cappuccino

Arpeggio (dark purple)
is a Mediterranean blend par excellence with a strong character, intense body and long exquisite after-taste. Its thick, smooth crema remains to the last sip.

Strength: 9
Ideal cup size: Espresso, ½ Espresso or Cappuccino

Roma (dark gray)
With its sweetness and its woody notes, Roma is the ideal coffee for a short espresso that is not too strong.

Strength: 8
Ideal cup size: Espresso or ½ Espresso

Decaffeinato Intenso (brick red)
An intense, rich taste with slightly elevated acidity gives this decaffeinated coffee all the strength of a true espresso.

Strength: 7
Ideal cup size: Espresso

Livanto (copper brown)
A very well balanced blend, Livanto is characterized by a dense and velvety aroma. It is a uniquely rounded espresso.

Strength: 6
Ideal cup size: Espresso

Capriccio (dark green)
is a full-bodied espresso, which is also creamy, mild and rich. Its crema is very dense, and so delicate that it reflects the light.

Strength: 5
Ideal cup size: Espresso

Volluto (yellow gold)
Lightly roasted but full-bodied, Volluto's flavor is round and fresh with a cereal hint. Volluto's character is reinforced by a touch of acidity.

Strength: 4
Ideal cup size: Espresso

Cosi (dark brown)
is perfect for espresso lovers who enjoy a mild, smooth crema coupled with the refreshing acidity of a hint of lemon.

Strength: 3
Ideal cup size: Espresso

Decaffeinato (red)
This is the lighter and creamier decaffeinated blend, offering a rich and delicate balance between mildness and acidity. Decaffeinato's crema is distinguished by its hazel color and consistent texture in the mouth.

Strength: 2
Ideal cup size: Espresso

The "Pure Origin" Espresso range

Indriya from India (sage)
This intense bodied espresso is a blend of Arabica and Robusta from Southern India. Its sustained but quick roasting balances its strong character, bringing out cocoa and spicy notes of clover, pepper and nutmeg. Indriya expresses all its passion in a half espresso cup (25 ml).

Strength: 10
Ideal cup size: Espresso, ½ Espresso or Cappuccino

Rosabaya de Colombia (rose)
On a soft base, this blend of Colombian Arabicas deploys typical notes of red fruits jam, and echoes winey flavors. Grown on small Colombian plantations, the coffee is handpicked and prepared using the wet method. Separate roasting accentuates the fruity notes and acidity whilst bringing body to the coffee.

Strength: 6
Ideal cup size: Espresso

Dulsão do Brasil (gold)
With its sweet notes of cereal, malt, honey and maple syrup, Dulsão do Brasil's combination of separately roasted yellow and red Brazilian Bourbon coffees creates a roundness on the palate. These varieties are treated with the semi-dry method so that the mucilage sugars infuse their sweetness to the coffee beans' heart.

Strength: 5
Ideal cup size: Espresso

Fortissio Lungo (teal)
This full-bodied Lungo is characterized by notes of dark-roasted beans. A blend of Central and South American Arabicas with a hint of Robusta, Fortissio Lungo offers a delicious bitterness and an exquisite fullness on the palate.

Strength: 7
Ideal cup size: Lungo

Vivalto (sky blue)
is an intense Lungo which combines a beautifully roasted and floral notes. Its crema is notable for its smooth texture. Equally delicious prepared with milk.

Strength: 6
Ideal cup size: Lungo

Decaffeinato Lungo (coral)
has a consistent body and a delicious texture on the palette. Its slow and consistent roasting reveals a delicious roasted flavor.

Strength: 5
Ideal cup size: Lungo

Finezzo (butter yellow)
This light and thirst-quenching Lungo expresses a floral bouquet of jasmine, orange flower and bergamot. A lightly roasted blend of floral East African Arabicas and scented Arabicas from South and Central America, Finezzo Lungo is refreshed by a touch of acidity.

Strength: 3
Ideal cup size: Lungo

Please have the model and serial number of your appliance available before contacting Technical Service.

U.S.A.
Miele, Inc.

National Headquarters
9 Independence Way
Princeton, NJ 08540
Phone: 800-843-7231
609-419-9898
Fax: 609-419-4298
www.mieleusa.com

Technical Service & Support Nationwide
Phone: 800-999-1360
Fax: 888-586-8056

TechnicalService@mieleusa.com

Canada
Miele Limited

Headquarters and Showroom
161 Four Valley Drive
Vaughan, ON L4K 4V8
Phone: 800-643-5381
905-660-9936
Fax: 905-532-2290
www.miele.ca
professional@miele.ca
(commercial enquiries)

MieleCare National Service
Phone: 800-565-6435
905-532-2272
Fax: 905-532-2292
customercare@miele.ca
(general and technical enquries)

Germany
Miele & Cie. KG
Carl-Miele-Straße 29
33332 Gütersloh

Alteration rights reserved / 1511

M.-Nr. 07 357 080 / 07

INFORMATION IS SUBJECT TO CHANGE. PLEASE REFER TO OUR WEBSITE TO OBTAIN THE MOST CURRENT PRODUCT SPECIFICATIONS, TECHNICAL & WARRANTY INFORMATION.